## Guarantee

This product is guaranteed for 12 months from the date of original purchase. If any defect arises due to faulty materials of workmanship, the faulty products must be returned to the place of purchase.
Refund or replacement is at the discretion of the retailer.

The following conditions apply:
- The product must be returned to the retailer with proof of purchase.
- The product must be installed and used in accordance with the instructions contained in the instruction guide.
- It must be used only for domestic purposes.
- It does not cover wear and tear, damage, misuse or consumable parts.
- Tower has limited liability for incidental or consequential loss or damage.

This guarantee is valid in the UK and Eire only.

## Technical Specification

| | |
|---|---|
| Model Number | 337417/363190 |
| Power Supply | 220–240V~50Hz |
| Power | 1800W |
| Capacity | 2.5 Litres |

Waste electrical products should not be disposed of with household waste. Please recycle at your local recycling facility. Check with your local authority for recycling advice.

# 2.5 LITRE FRYER

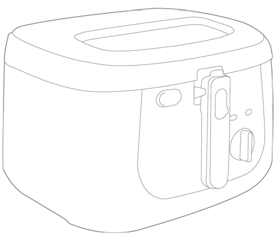

1912 Midland Metal Spinners was founded by George Cadman, who was then 65 years old, as a metal holloware manufacturing company, in St. Mark's Street, Wolverhampton. They later moved into the Tower and Fort Works in Pelham Street, which ultimately gave rise to the famous Tower brand name.

1937 Tower exhibited some of their latest holloware designs at the British Industries Fair. As you can see from the original poster, their stand No. A410 must have been a great sight as it promoted their *"Beautiful, inexpensive, untarnishable Plate, at prices all can afford to pay"*.

1961 Tower became one of the largest manufacturers of aluminium holloware, electric kettles, tea pots and other household articles with over 1,000 employees.

1974 Russell Hobbs took ownership of the expanding Tower brand.

Towercrom
Towerbrand
WITHOUT WOLVERHAMPTON, THE COUNTRY WOULD COME TO A STICKY END.
Towerbrand

## Your 2.5 Litre Fryer

**In The Box**
Carefully remove your 2.5 litre fryer from the box.

- 2.5 litre fryer
- Basket with handle
- Instruction manual

## General Safety

- Ensure that you read all of the safety instructions before using this product.
- This product has been designed and manufactured to meet European safety standards, but like any electrical equipment, care must be taken if you are to obtain the best results and safety is to be assured.
- Do read the operating instructions before you attempt to use the product.
- Do ensure that all electrical connections (including the mains plug, extension leads and interconnections between pieces of equipment) are properly made in accordance with the instructions.
- Switch off and remove the mains plug or mains adapter when making or changing any connections.
- Do consult your dealer if you are ever in doubt about the installation, operation or safety of your product.
- Don't remove any fixed covers as this may expose you to dangerous voltages.
- Don't continue to operate the product if you are ever in doubt about it working normally, or if it is damaged in any way. Switch it off, withdraw the plug from the mains and consult your dealer.
- There are no user serviceable parts in the product. When servicing, refer to qualified service personnel.
- Don't leave the product switched on when it is unattended for long periods of time, unless it is specifically stated that it is designed for unattended operation or has standby mode.
- Don't obstruct the ventilation vents on the product, for example with curtains or soft furnishings, as this may cause overheating.
- Do not place the product in closed bookcases or racks without proper ventilation.
- Do not use the product in humid or damp conditions or allow it to be exposed to rain or moisture.
- Store the product in a clean, dry environment.
- The product shall not be exposed to dripping or splashing and no objects filled with liquids, such as vases, shall be placed on it.
- Position the power cable and other connected cables so that they are not likely to be walked on, pinched or where items can be placed on or against them.
- Never allow children to insert foreign objects into holes or slots on the product.
- No naked flame sources, such as lighted candles, should be placed on the product.
- Disconnect the product from the mains supply before cleaning.
- Do not use any liquids or aerosol cleaners, as this may damage the product. Use a soft, dust-free cloth.
- Contact local authorities for means of disposal.
- Make sure that other people in your household are conversant with operation of the product.

## Product Safety

- This appliance is intended to be used in household and similar applications such as:
  - Farm houses;
  - By clients in hotels, motels and other residential type environments;
  - Bed and breakfast type environments.
- It is not suitable for use in staff kitchen areas in shops, offices and other working environments.
- For indoor use only.
- Place the appliance on a flat, stable, heat resistant surface, away from heat source and where it cannot be splashed by water.
- Allow adequate air space above and on all sides for air circulation.
- Do not use fryer under cupboards or shelves.
- Do not use outdoors or near water.
- Do not use your fryer near or below combustible material, such as curtains.
- The cord should reach from the socket to the base unit without straining the connection.
- Do not operate the appliance if it's damaged or malfunctions.
- Do not use the fryer for anything other than its intended purpose.
- Route the cable so it doesn't overhang and cant be tripped over or caught.
- Never attempt to move the appliance until it is completely cool.
- To protect against electric shock, do not immerse the appliance, cord or plug in water or other liquid.
- Unplug the appliance when not in use and before cleaning. Allow to cool before putting on or taking off parts.
- Never leave the appliance unattended when connected to the electricity supply.
- Never lean over the appliance when it is in use.
- Be careful not to touch the surfaces of the appliance as temperature of accessible surfaces may get very hot when the appliance is operating.
- This appliance is not intended for use by persons (including children) with reduced physical, sensory or mental capabilities, or lack of experience and knowledge, unless they have been given supervision or instruction concerning use of the appliance by a person responsible for their safety.
- The fryer must only be used by a responsible adult. Use and store it out of reach of children.
- Children should be supervised to ensure that they do not play with the appliance.
- Keep the appliance and its cord out of reach of children aged less than 8 years. Cleaning and user maintenance should not be made by children.
- Always dry food before frying, e.g. chips which are too wet, as they can cause the hot oil to froth excessively.
- This appliance is not intended to be operated by means of an external timer or a separate remote control system.
- Check that the voltage on the rating plate corresponds with your house electricity supply.
- Do not turn the appliance on if there is no oil in the bowl.
- Always fill the Deep Fryer with a good quality cooking oil between the MIN and MAX marks inside the bowl. We recommend corn, groundnut, rapeseed or other vegetable oils. DO NOT use any fats that are solid at room temperature such as margarine, butter or lard, or oils that have a low smoke point such as extra virgin olive oil and coconut oil. Failure to follow these instructions can result in product and/or property damage.
  **Note:** Each time oils are heated, the smoke point is reduced. It is best to change your oils regularly, otherwise there is a risk the oil will catch fire during cooking.

**CAUTION:** If oil level is below MIN mark, you may damage the appliance. If above the MAX mark, hot oil may escape causing damage and injury.

- The appliance has a safety thermostat that switches off in the case of overheating. This may happen if there is not enough oil in the tank. If this happens, allow the appliance to cool completely before using again.
- Avoid mixing oil of different types or qualities.
- Change the oil when it becomes brown or milky in colour.
- Change the oil after using 15 times.
- You may store oil in the fryer if you make sure that it is covered by the lid.
- Take into account the food to be cooked before you select your frying temperature. As a general guide pre-cooked food needs a higher cooking temperature than raw food.
- All food items, particularly frozen food and potatoes, contain moisture. When lowered into hot oil, the water in the food turns to steam and escapes.
- Your food must always be dry in order to avoid overflowing and to prolong the use of the oil.
- Do not overload the basket.
- Select your cooking utensils with care. Do not use utensils that may melt. Metal utensils become hot and therefore should have insulated handles.

## Electrical information
### (Fixed Mains Plug Only)

The mains lead supplied with this product is fitted with a BS1363/A 10 amp plug. If it is not suitable for your supply sockets it must be replaced with an appropriate plug.

If the plug becomes damaged and/or needs to be replaced please follow the wiring instructions on the next page. The plug removed must be disposed of immediately. It must not be plugged into a supply socket as this will be an electrical hazard.

If the fuse needs to be replaced it must be of the same rating and ASTA approved to BS1362. If the plug is changed, a fuse of the appropriate rating must be fitted in the plug, adapter or at the distribution board. If the fuse in a moulded plug is replaced, the fuse cover must be refitted before the appliance can be used.

## Wiring Instructions

The supply cable will be either 2-core or 3-core. Follow the appropriate wiring instructions shown. In both cases ensure that the outer sheath of the cable is firmly held by the cable clamp.

## Electrical Information (Power adapters only)

Never open the power adapter, you risk getting an electric shock.

Only use the power adapter that is supplied with your product.

You must always connect the power adapter to the product before connecting to the mains power supply.

The power adapter must be used indoors only, and must not be subjected to damp conditions.

The power adapter does not have any user serviceable parts.

### 2-core plug

WARNING: Do not connect either wire to the earth terminal.

This symbol indicates that this 2-core appliance is Class II and does not require an earth connection.

The wire coloured blue must be connected to the terminal marked with the letter N or coloured black.

The wire coloured brown must be connected to the terminal marked with the letter L or coloured red.

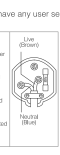

### 3-core plug

WARNING: This appliance must be earthed.

The wire coloured green and yellow must be connected to the terminal marked with the letter E, or by the earth symbol, or coloured green or green and yellow.

The wire coloured blue must be connected to the terminal marked with the letter N or coloured black.

The wire coloured brown must be connected to the terminal marked with the letter L or coloured red.

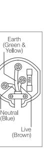

## Description Of Parts

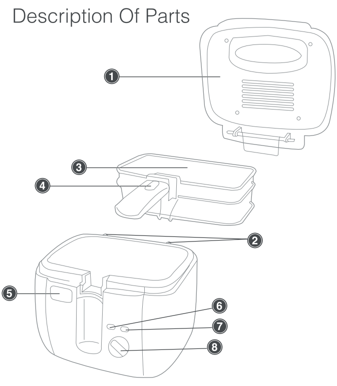

① Detachable lid with viewing window
② Lid mounts
③ Basket with folding handle
④ Handle release button
⑤ Lid release button
⑥ Power Indicator light (red)
⑦ Ready indicator light (green)
⑧ Temperature control

## Using your Fryer

- Clean all parts to remove any dust or manufacturing residues. (See Cleaning and Maintenance)
- Open the lid by the lid release button. Push the handle release button down on the basket and lift the handle 90°until it locks in place. Take out the basket with handle.
- Pour oil into the bowl up to the min/max level indicated.
- Plug the fryer into a suitable power outlet and adjust the temperature control to the desired temperature.
- When the oil reaches desired temperature, the ready indicator light will go off. Do not add food until the temperature is correct.
- Place the food into the basket.
- Carefully lower the basket into the bowl of hot oil.
- When cooked, raise and place the basket in the rest position on the fryer. Allow the food to drain before serving.
- Turn the temperature control to the lowest position and unplug the fryer from the power outlet.
- Place the cooked food in a dish lined with kitchen paper to help remove any excess oil.

**Note: During cooking, the ready indicator light will cycle on and off to maintain the correct temperature for fryer.**

## Cooking Guide

The frying times and temperatures are intended as a guide only and should be adjusted to suit quantity or thickness of food and your own taste.

| Food | Temperature | Time |
|---|---|---|
| Fresh chips | 190° | 10 - 12 min |
| Frozen chips | 190° | 10 min |
| Frozen breaded scampi | 170° | 3 - 5 min |
| Fresh fish in batter | 190° | 5 - 10 min |
| Frozen fish in batter | 170° | 10 - 15 min |
| Small breaded chicken | 190° | 15 - 20 min |
| Fresh chicken drumsticks | 170° | 15 min |
| Beef burgers | 170° | 2 - 3 min |

## Safety Thermostat

The fryer has a safety thermostat that switches the fryer off in case of overheating. This may happen if there is not enough oil in the bowl. If the safety thermostat has switched the fryer off, allow the fryer to cool completely before using again.

## Cleaning and Maintenance

**Before cleaning, switch off the fryer, unplug from power outlet and allow it to cool completely.**

- Carefully remove the lid out of its mount. Wash in warm soapy water, rinse thoroughly and stand the lid sideways to dry completely for at least 12 hours.
- Carefully pour out the oil from the fryer through a fine muslin or absorbent paper placed in a suitable funnel into a container.
- Wipe the inside of the bowl with kitchen paper. You may remove stubborn deposits with a dab of washing up liquid. If you use washing up liquid, make sure you remove all trace of it or it will taint your food.
- Wash the basket with handle in hot soapy water.
- Clean the exterior surface of the fryer with a damp cloth.

## Troubleshooting

| Problem | Reason | Possible Solution |
|---|---|---|
| Fryer doesn't switch on | Appliance has been turned on without oil | Allow the fryer to cool down before restarting |
| Oil is overflowing | Fryer is filled above maximum level | Check oil level inside fryer bowl |
| | Wet food is placed in oil | Make sure food is dry |
| | Too much food in basket | Do not overfill basket |
| Food is not browning | Too much food in basket | Do not overfill basket |
| | Food are sticking together | Make sure food is dry |